Center Section Vertical Tube
Material: 6063 (T52) Aluminum Square Tube 1" X .125(1/8) Wall
Two Required
(Not To Scale)

All Holes Drilled Through

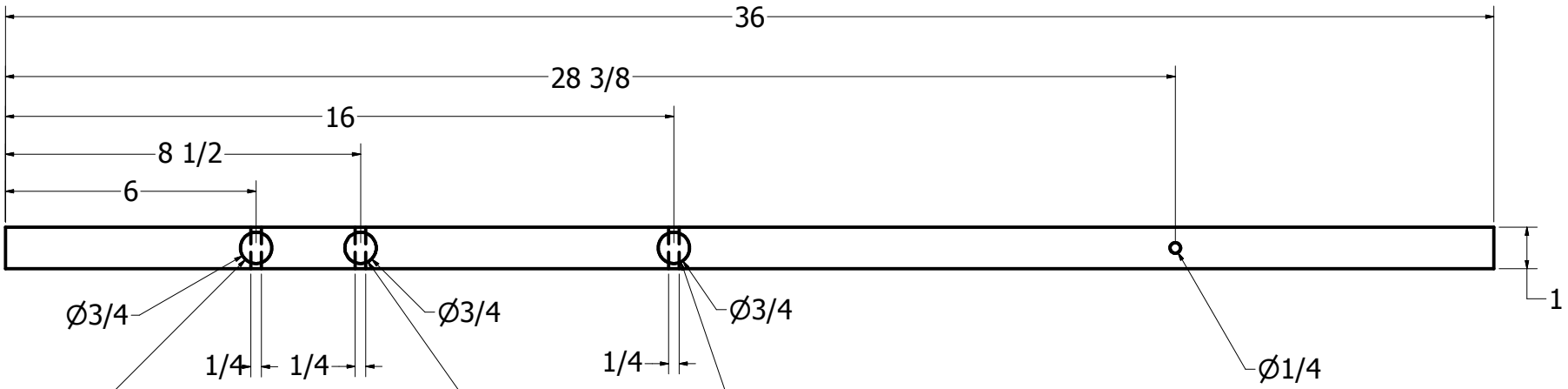

This 3/4" hole is for mounting an Apco underarm comfort bar paramotor harness. This hole may be moved for mounting different harnesses.

This 3/4" hole must remain in this position.

The dimension for this 3/4" hole is for mounting the Corsair M25 or M19 engines. This hole may be moved for mounting different engines.

Property of PPGPlans.com
Do not duplicate or make public